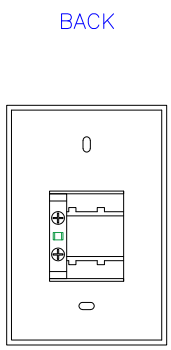

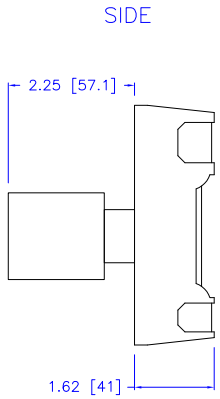

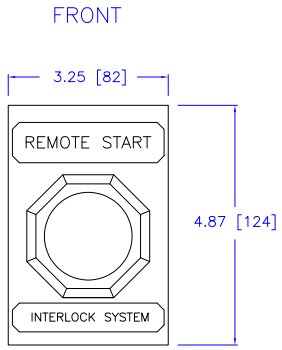

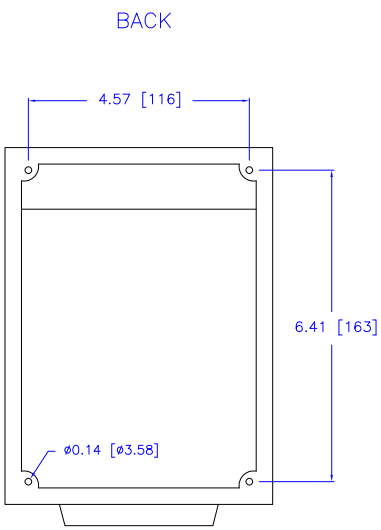

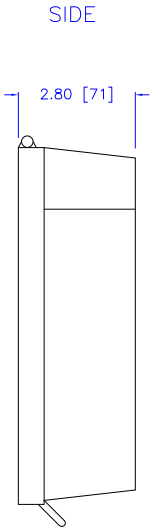

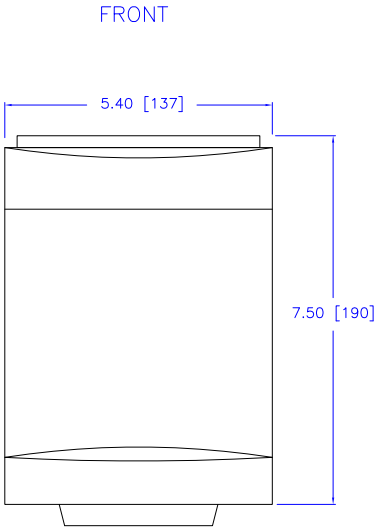

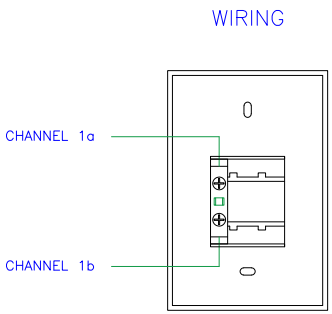

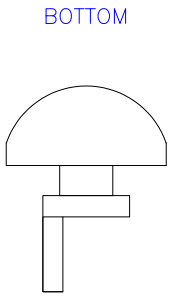

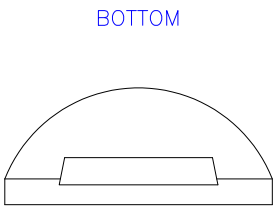

TB12 ETG–CP
SINGLE CHANNEL
CONNECTION EXAMPLE

NOTES:
1. ALL DIMENSIONS IN INCHES [mm].
2. SURFACE–MOUNTED.
3. ONE NORMALLY OPEN CONTACT, RATED 1A @ 250V dc / 6A @ 600V ac.
4. RECOMMENDED 18–22 GAUGE STRANDED WIRE.

KENTEK
"Laser People Helping Laser People"®
kenteklaserstore.com

5 Jarado Way
Boscawen, NH 03303
Phone: 800-432-2323
Fax: 603-435-7441
info@kenteklaserstore.com

THIS DOCUMENT AND ITS CONTENTS INCLUDING DRAWINGS, DIMENSIONS AND SPECIFICATIONS ARE PROPRIETARY TO KENTEK CORPORATION AND SHOULD NOT BE REPRODUCED, COPIED, OR DISSEMINATED IN WHOLE OR IN PART WITHOUT THE WRITTEN PERMISSION OF KENTEK CORPORATION. KENTEK CORPORATION ASSUMES NO RESPONSIBILITY FOR ACTUAL OR CONSEQUENTIAL DAMAGE INCURRED AS A RESULT OF ANY USER'S RELIANCE ON THIS DOCUMENT OR THE PRODUCTS DESCRIBED HEREIN.

DRAWING NUMBER:	2610–13	REV: B
TITLE:	ENTRY–GUARD™ REMOTE START BUTTON	
PART NUMBER:	**ETG-SS-FC**	